Part No:	GH-36003-MSS
Holding Capacity:	272Kg
Plunger Stroke:	31.8 mm
Handle Opens:	180°
Weight:	0.42Kg
Spindle Supplied:	SA-085012-SS

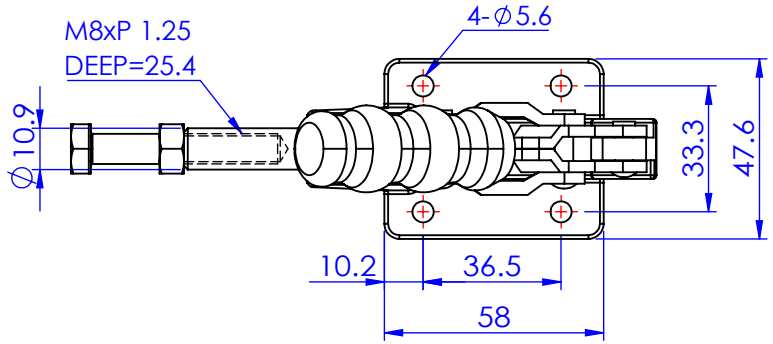

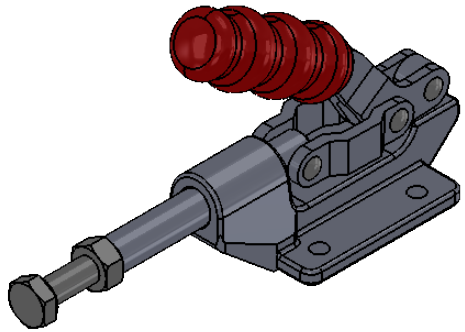

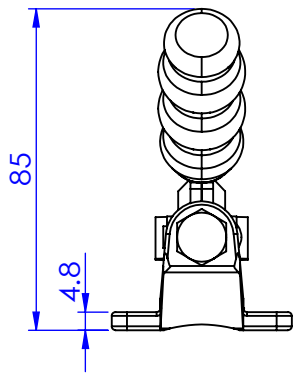

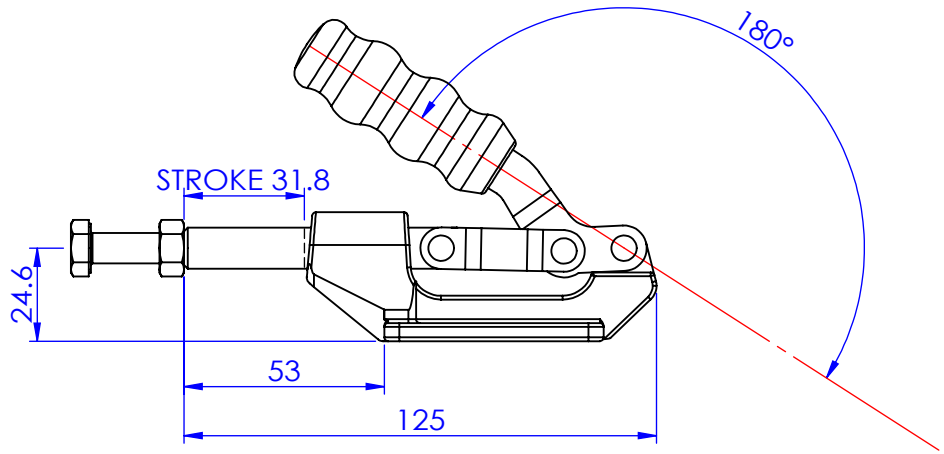

Unit:mm

Scale: 1:2

Good Hand Enterprise Co., Ltd

TITLE:

DWG NO. GH-36003-MSS

A4